Report Date: 25 Jun 2014

Summary Report for Individual Task
551-8ST-3023
Conduct Maintenance of a .50 Caliber Machine Gun
Status: Approved

Distribution Restriction: Approved for public release; distribution is unlimited.

Destruction Notice: None

Foreign Disclosure: FD1 - The materials contained in this course have been reviewed by the course developers in coordination with the Transportation School, Fort Lee, Virginia 23801 foreign disclosure authority. This course is releasable to students from all requesting foreign countries without restrictions.

Condition: Given a caliber .50 M2 HB machine gun, M3 tripod, MK64 gun cradle mount, pintle, traversing and elevating (T&E) mechanism, linked caliber .50 ammunition, headspace and timing gauge, cleaner lubricant and preservative (CLP), rifle bore cleaner (RBC), lubricating oil semifluid (LSA), carbon removing compound, bore brush, wiping rags, M4 cleaning rod, small-arms (2-inch) cleaning swabs, and a wooden block in an Operational Environment (OE).

Standard: The Soldier cleaned and lubricated the caliber .50 M2 machine gun and its components, cleaned and inspected all parts and ammunition, turned in unserviceable parts for maintenance, and assembled the gun so it is operational with no damage or injury to personnel.

Special Condition: None

Safety Risk: Low

MOPP 4:

Task Statements

Cue: None

DANGER

None

WARNING

Adhere to all warning statements.

CAUTION

Adhere to all caution statements.

Remarks: None

Notes: None

Performance Steps

1. Clear the caliber .50 machine gun.

a. Unlock the bolt latch release and raise the cover (Figure 551-8ST-1025_01).

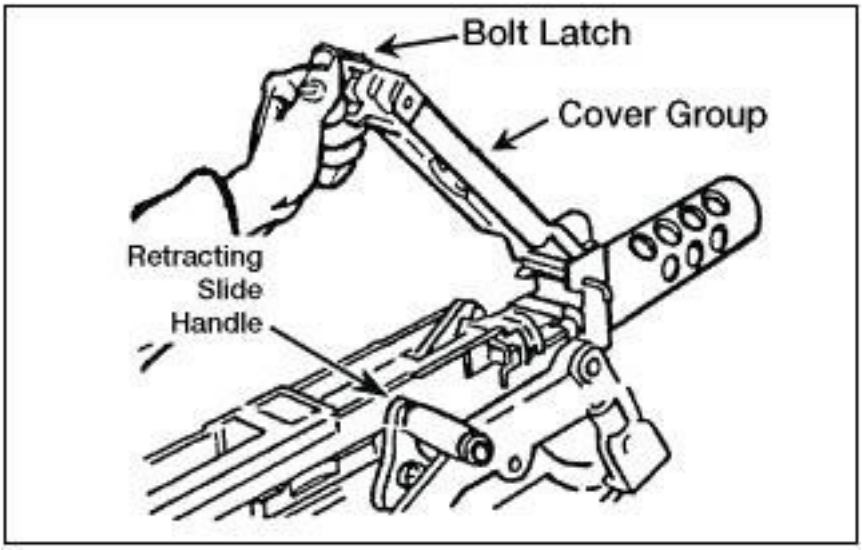

Figure 551-8ST-1025_01 (Raising the cover)

b. Pull and lock the bolt to the rear, leaving the retracting slide handle to the rear.

c. Inspect the chamber and T-slot to make sure they hold no rounds.

d. Place a wooden block inside the receiver, between the bolt and the rear of the barrel.

e. Insert the cleaning rod in the muzzle end of the barrel until you can see the rod in the receiver.

f. Remove the cleaning rod.

g. Grasp the retracting slide handle, press the bolt latch release, and ease the bolt forward.

h. Close the cover.

2. Disassemble the machine gun.

a. Remove the barrel assembly.

(1) Raise the cover group (Figure 551-8ST-1025_01).

(2) Grasp the retracting slide handle with the right hand, palm up.

(3) Pull the bolt to the rear until the barrel locking spring lug aligns with the 3/8-inch hole in the right side of the receiver (Figure 551-8ST-1025_02).

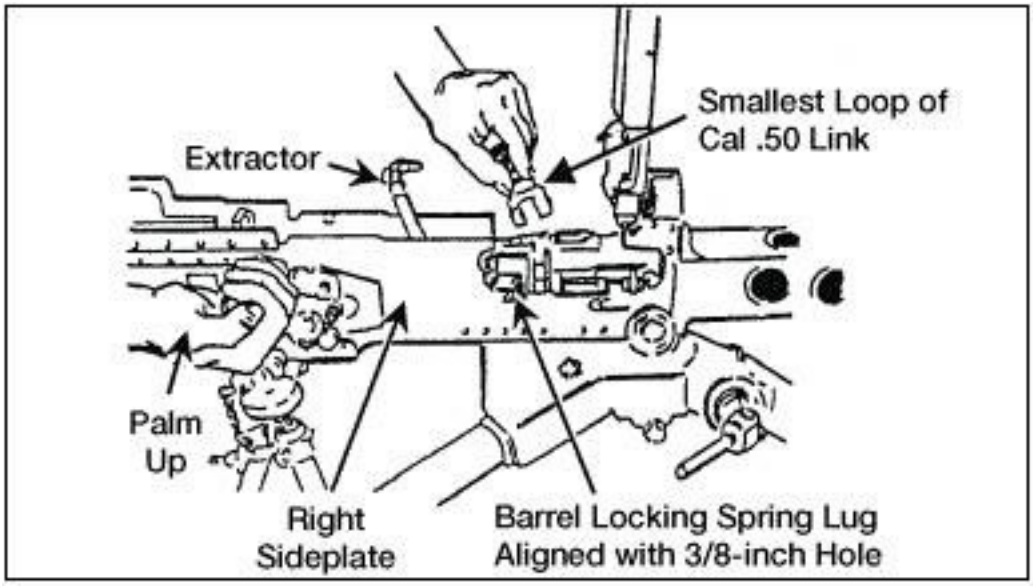

Figure 551-8ST-1025_02 (Alignment of the lug)

(4) Place the smallest loop of a caliber .50 link between the trunnion block and the barrel extension (Figure 551-8ST-1025_02).

Note: This keeps the barrel locking spring lug aligned with the 3/8-inch hole.

(5) Unscrew the barrel from the receiver.

Note: Be careful not to damage the threads or barrel locking notches.

(6) Remove the caliber .50 link to allow the bolt to go forward slowly, making sure that the bolt group does not slam forward with the barrel removed.

WARNING

Do not remove the backplate unless the bolt is in the forward position. When removing the backplate, stand to one side of the weapon to avoid possible injury from the driving spring rod.

b. Remove the backplate assembly.

(1) Ensure that the bolt is forward and the bolt latch release is unlocked (in the single shot mode) (Figure 551-8ST-1025_03).

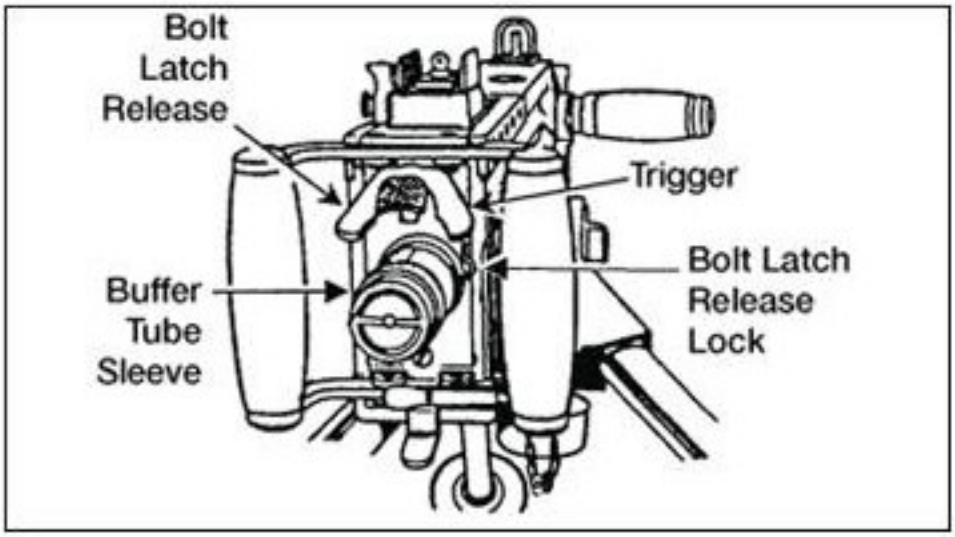

Figure 551-8ST-1025_03 (Releasing the bolt latch)

(2) Pull the backplate latch lock straight back while lifting up on the backplate latch (Figure 551-8ST-1025_04).

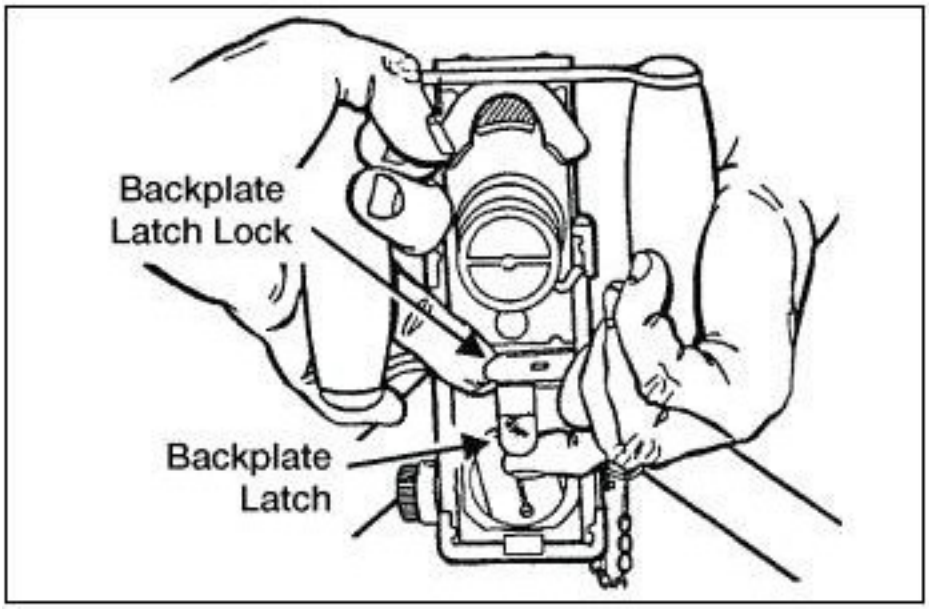

Figure 551-8ST-1025_04 (Removal of the backplate)

(3) Remove the backplate assembly by lifting straight up.

c. Remove the driving spring rod assembly (Figure 551-8ST-1025_05).

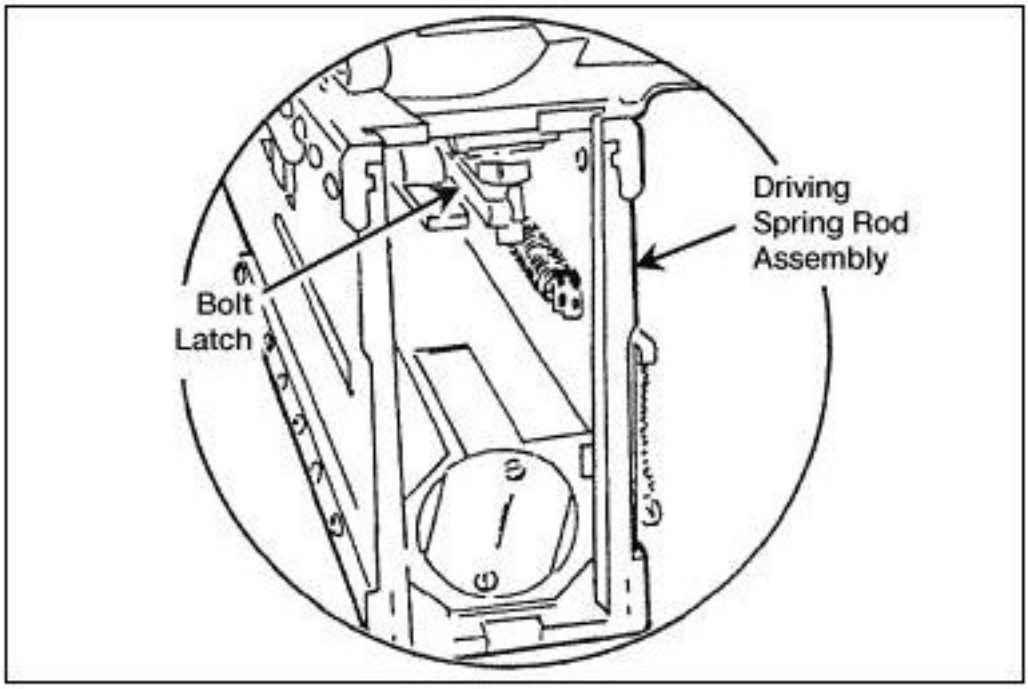

Figure 551-8ST-1025_05 (Removal of the driving spring rod assembly)

WARNING

Never try to charge the machine gun while the backplate is off and the driving spring rod assembly is in place. If the backplate is off and the driving spring assembly is compressed, the retaining pin on the driving spring can slip from its seat in the side plate. This could cause serious injury to anyone behind the machine gun.

(1) Push the rear of the driving rod assembly forward and to the left to free it from the side of the receiver.

(2) Pull the driving spring rod assembly to the rear and out of the receiver.

d. Remove the bolt assembly.

(1) Retract the bolt assembly far enough to the rear to align the bolt stud with the bolt stud hole in the right side plate of the receiver (Figure 551-8ST-1025_06).

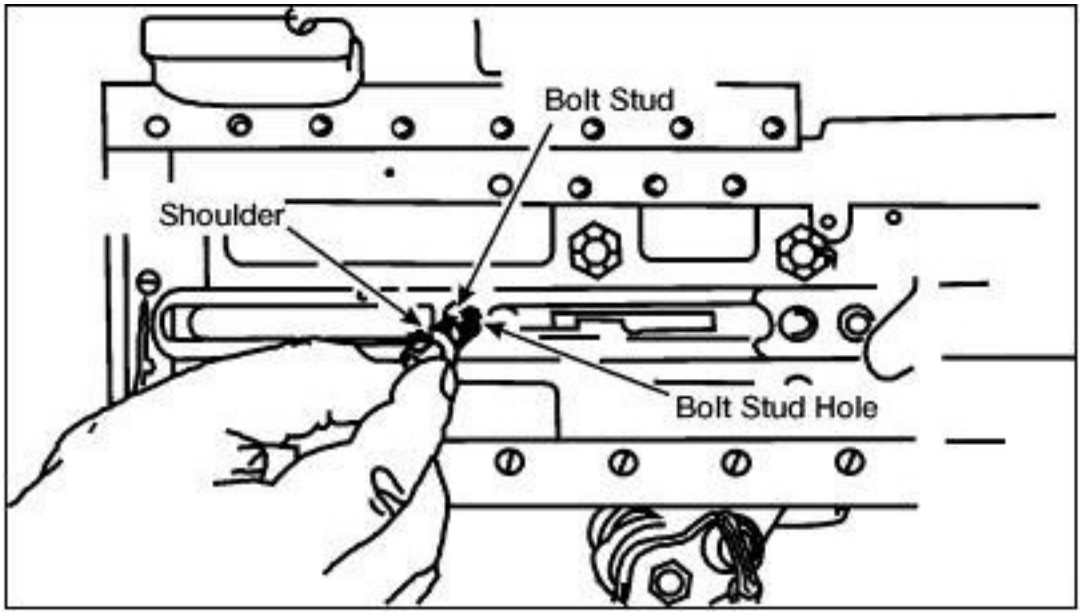

Figure 551-8ST-1025_06 (Removal of the bolt stud)

(2) If you accidentally move the bolt all the way to the rear, the bolt latch will engage in the bolt latch notches in the top of the bolt. If this occurs, raise the bolt latch and push the bolt forward to align the bolt stud with the clearance hole (Figure 551-8ST-1025_07).

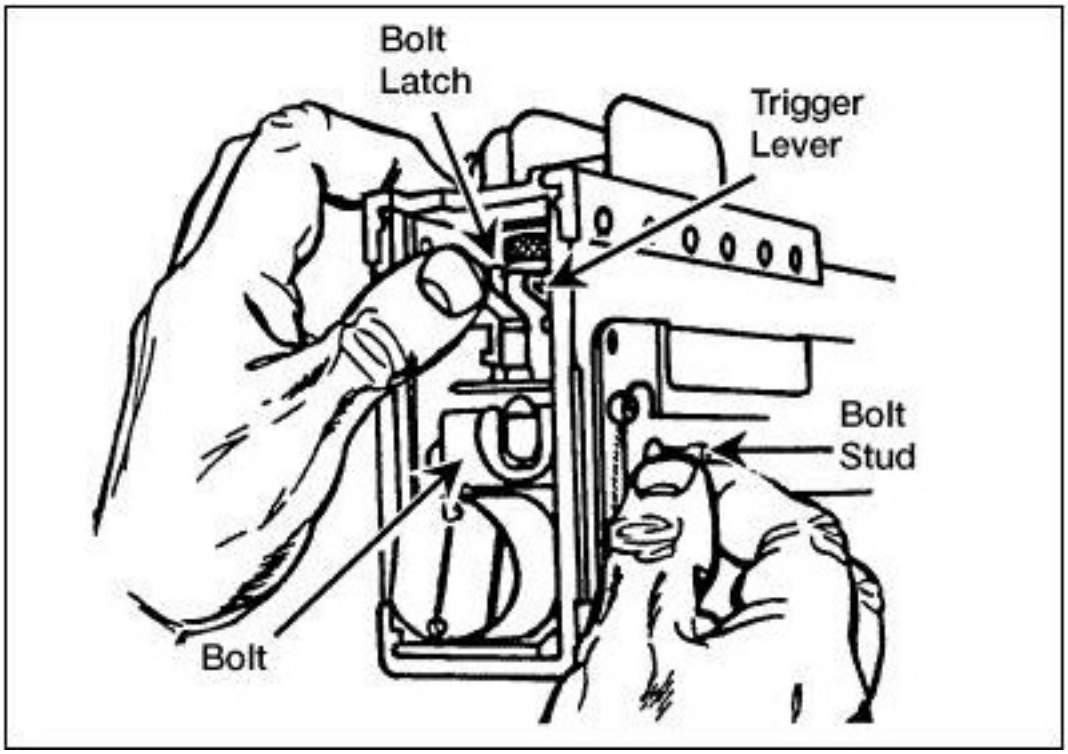

Figure 551-8ST-1025_07 (Unlatching the bolt)

(3) Remove the bolt stud.

(4) Remove the bolt assembly by pulling it from the rear of the receiver (Figure 551-8ST-1025_08).

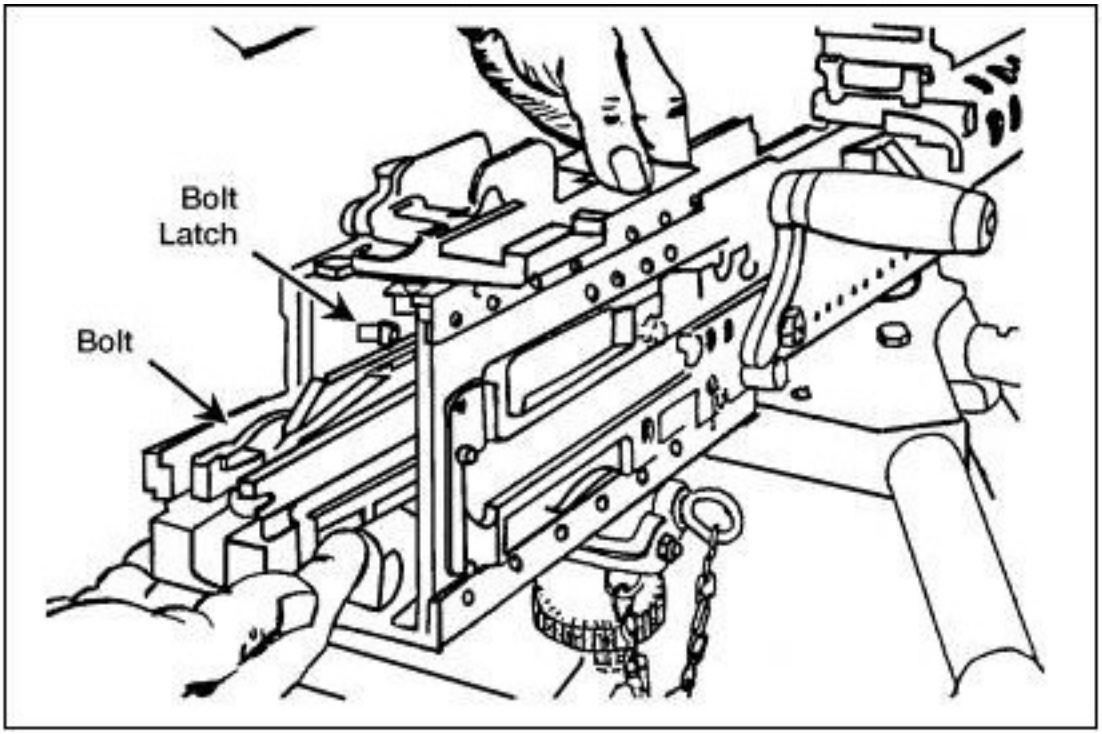

Figure 551-8ST-1025_08 (Removal of the bolt from the receiver)

(5) Disassemble the bolt.

(a) Rotate the cartridge extractor upward and remove it from the left side of the bolt (Figure 551-8ST-1025_09).

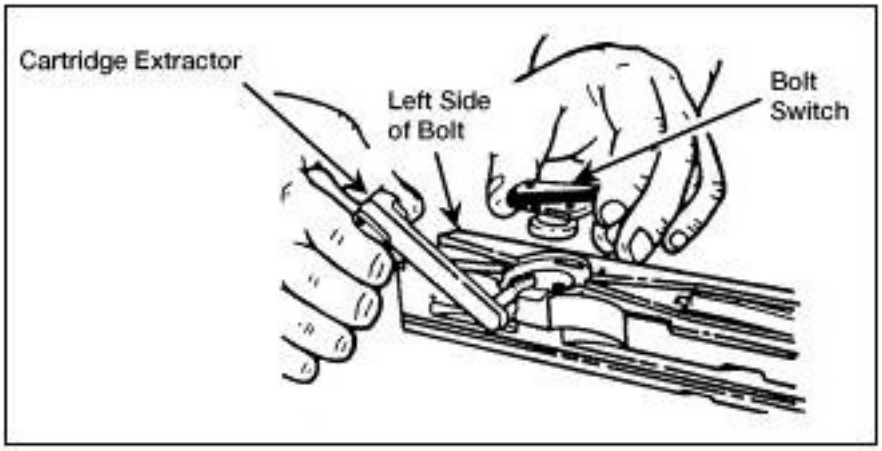

Figure 551-8ST-1025_09 (Removal of the cartridge extractor and bolt)

(b) Remove the bolt switch by lifting it straight up.

(c) Place the cocking lever in its rearmost position. Press down on the sear with a swab holder and release the firing pin spring (Figure 551-8ST-1025_10).

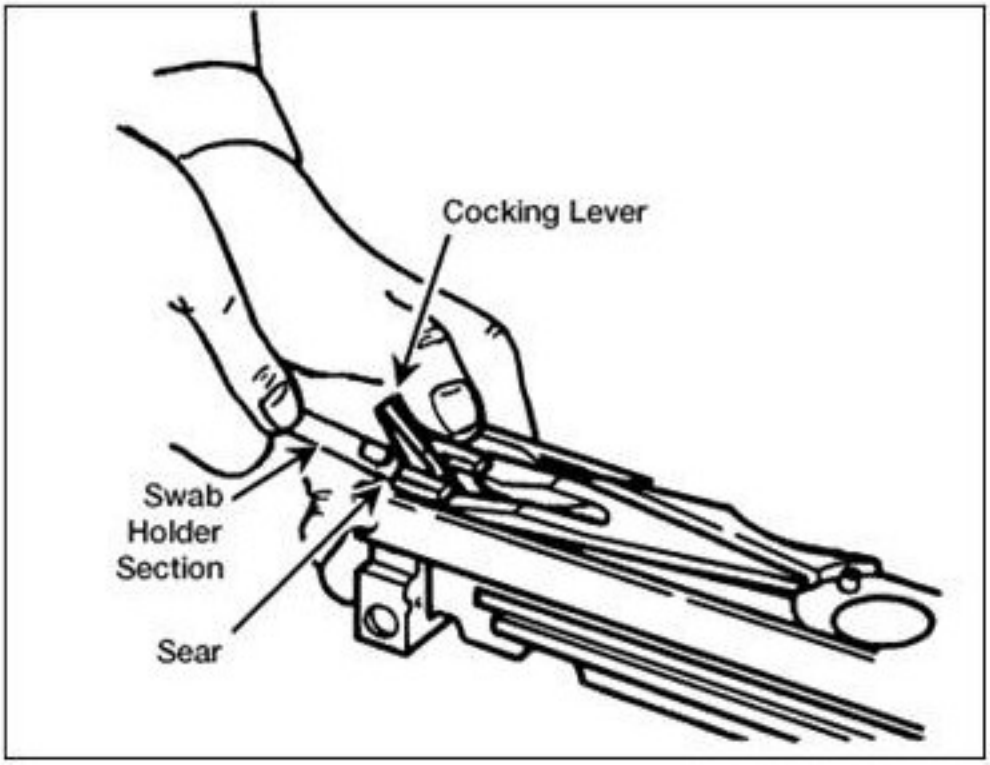

Figure 551-8ST-1025_10 (Releasing the firing pin spring)

(d) Insert a swab holder section in the hole at the rear of the bolt and push out the cocking lever pin and the cocking lever (Figure 551-8ST-1025_11).

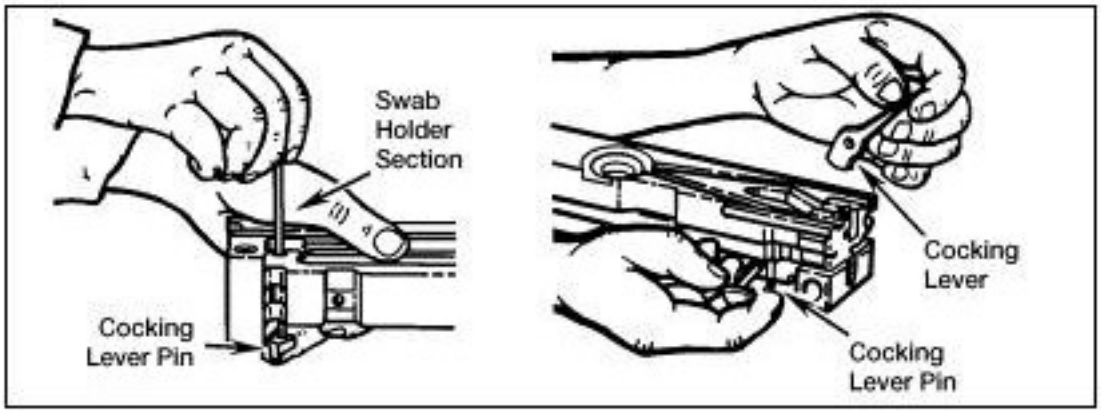

Figure 551-8ST-1025_11 (Removal of the cocking lever pin and cocking lever)

(e) Use the thin end of the cocking lever to rotate the accelerator stop lock to the center of the bolt, then pry up the accelerator stop lock and remove it (Figure 551-8ST-1025_12).

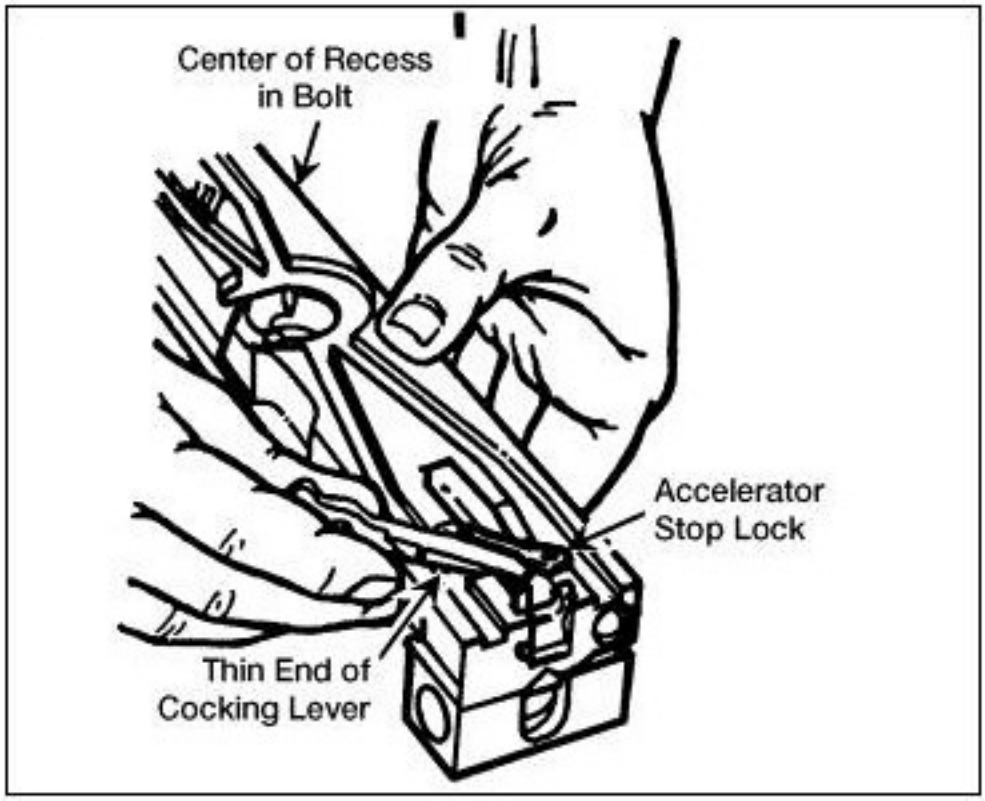

Figure 551-8ST-1025_12 (Removal of the accelerator stop lock)

(f) Using the thin end of the cocking lever, press the accelerator stop from the bolt, turn the bolt over, and pry the accelerator stop from bottom of bolt (Figure 551-8ST-1025_13).

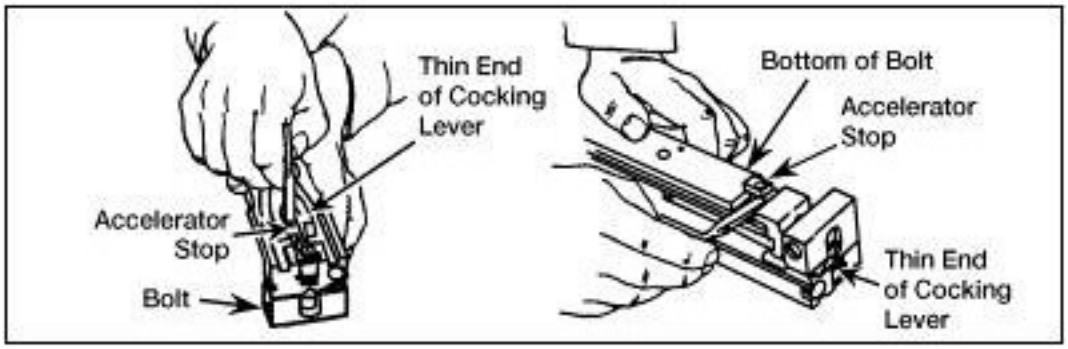

Figure 551-8ST-1025_13 (Removal of the accelerator stop)

(g) Depress the sear and remove the sear slide, sear, and sear spring (Figure 551-8ST-1025_14).

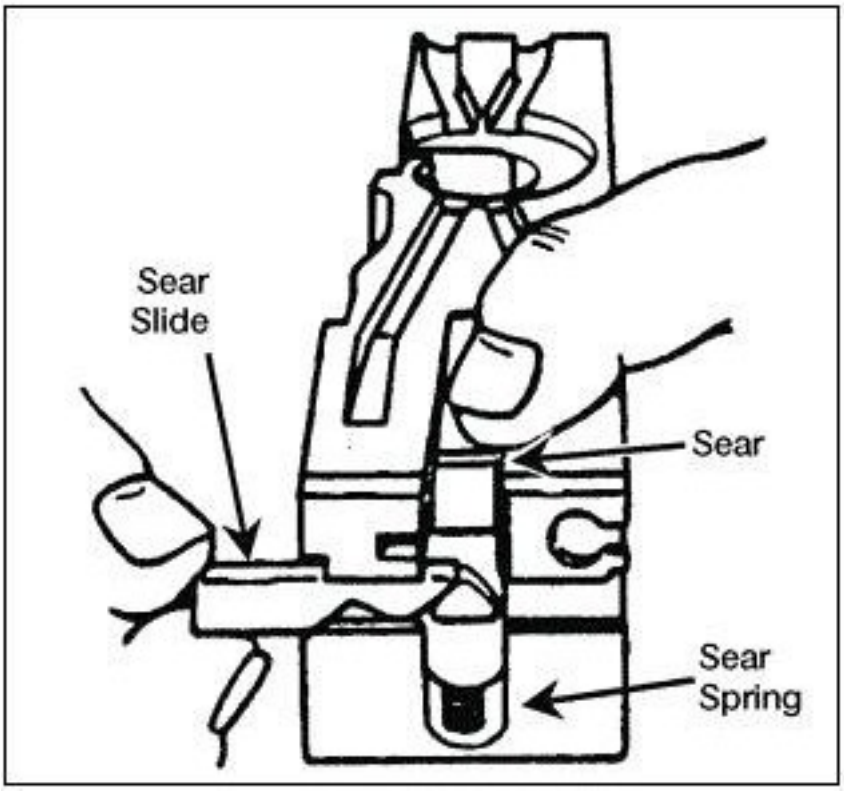

Figure 551-8ST-1025_14 (Removal of sear slide, sear, and sear spring)

(h) Tip the front end of the bolt upward and remove the firing pin extension assembly (Figure 551-8ST-1025_15).

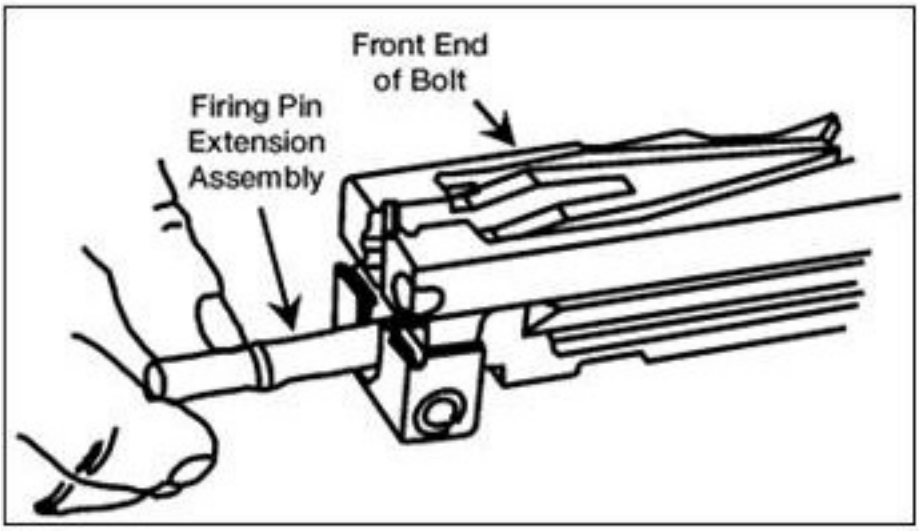

Figure 551-8ST-1025_15 (Removal of the firing pin extension assembly)

(i) Remove the firing pin from the firing pin extension assembly.

e. Remove the barrel buffer and barrel extension assemblies (Figure 551-8ST-1025_16).

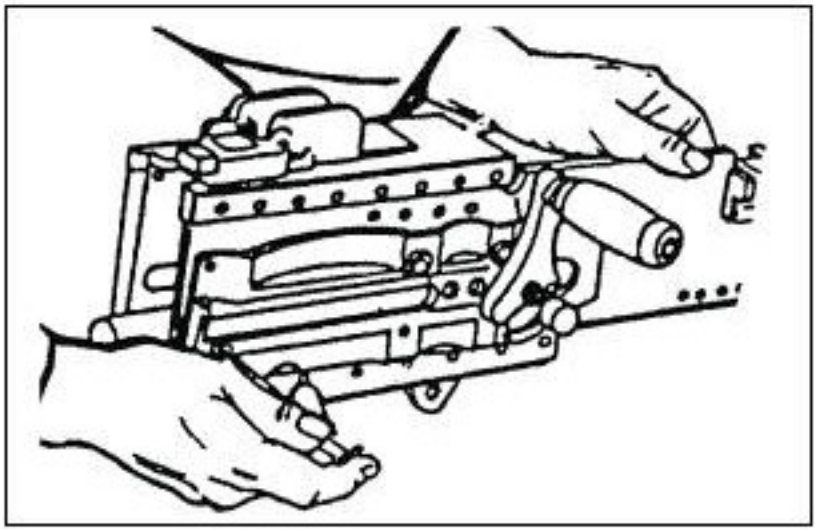

Figure 551-8ST-1025_16 (Removal of the barrel buffer and barrel extension assemblies)

WARNING

Maintain thumb pressure on the buffer accelerator while removing the barrel buffer and barrel extension assemblies.

(1) Insert a pointed instrument (you can use the pointed end of the M4 cleaning rod) in the hole at the lower rear corner of the right side plate. Depress the buffer body lock and, at the same time, place one hand inside the receiver and push the barrel extension and buffer assemblies to the rear until the buffer accelerator is near the rear of the receiver body.

(2) Maintain pressure on the buffer accelerator with your thumb and remove the barrel buffer and barrel extension assemblies from the receiver. Separate them by pushing forward on the accelerator tips (Figure 551-8ST-1025_17).

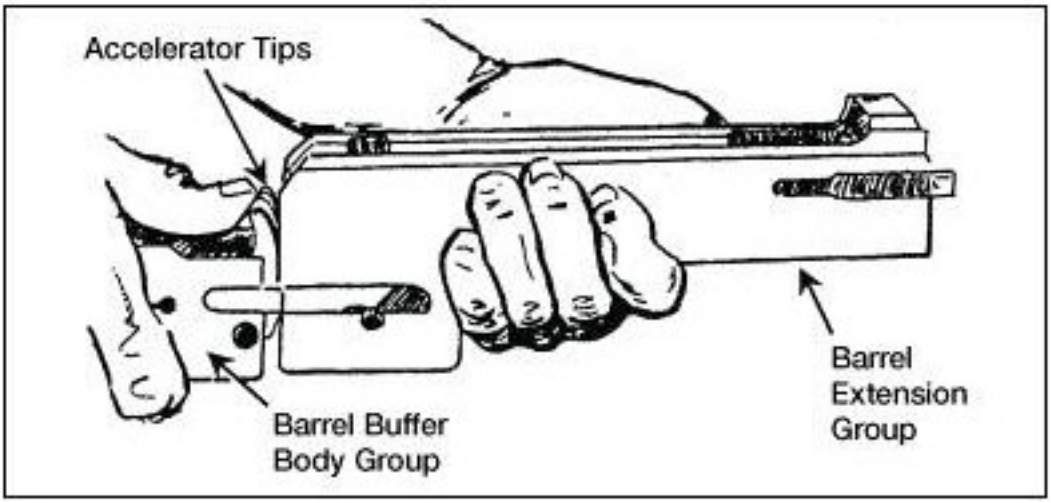

Figure 551-8ST-1025_17 (Separation of the barrel buffer and barrel extension assemblies)

(3) Disassemble the barrel buffer assembly.

(a) Remove the buffer assembly by pushing it out the rear of the body of the barrel buffer (Figure 551-8ST-1025_18).

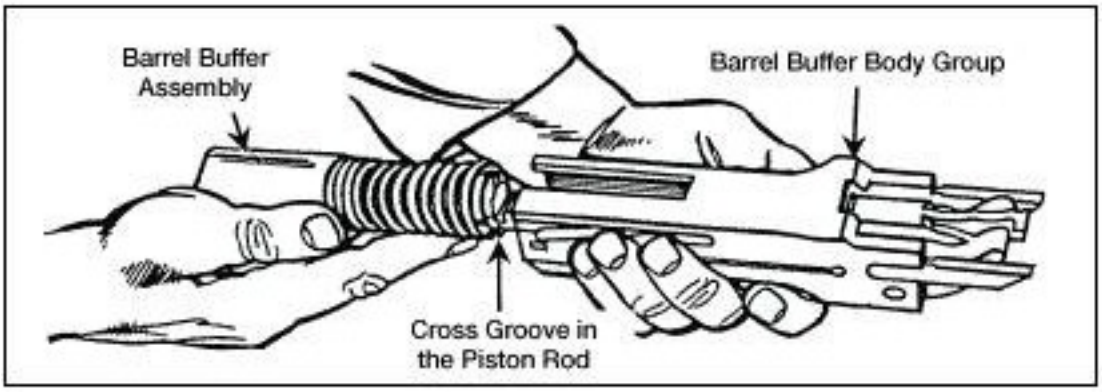

Figure 551-8ST-1025_18 (Removal of the barrel buffer assembly)

(b) Using a swab holder, drive the accelerator pin assembly from the barrel buffer body group.

(c) Remove the buffer accelerator.

(4) Disassemble the barrel extension assembly.

(a) Using the pointed end of the M4 cleaning rod, remove the breech lock pin assembly (Figure 551-8ST-1025_19).

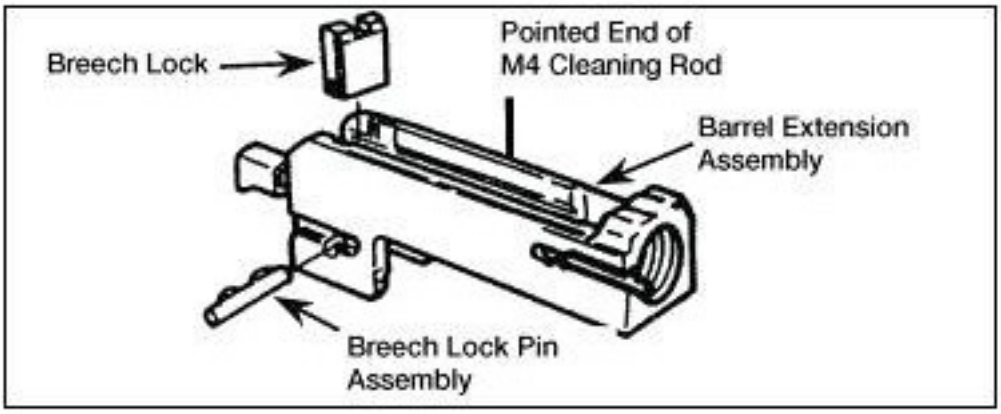

Figure 551-8ST-1025_19 (Removal of the breech lock pin assembly and breech lock)

(b) Remove the breech lock.

f. Disassemble the receiver assembly.

(1) Remove the front cartridge stop and rear cartridge stop assembly (Figure 551-8ST-1025_20).

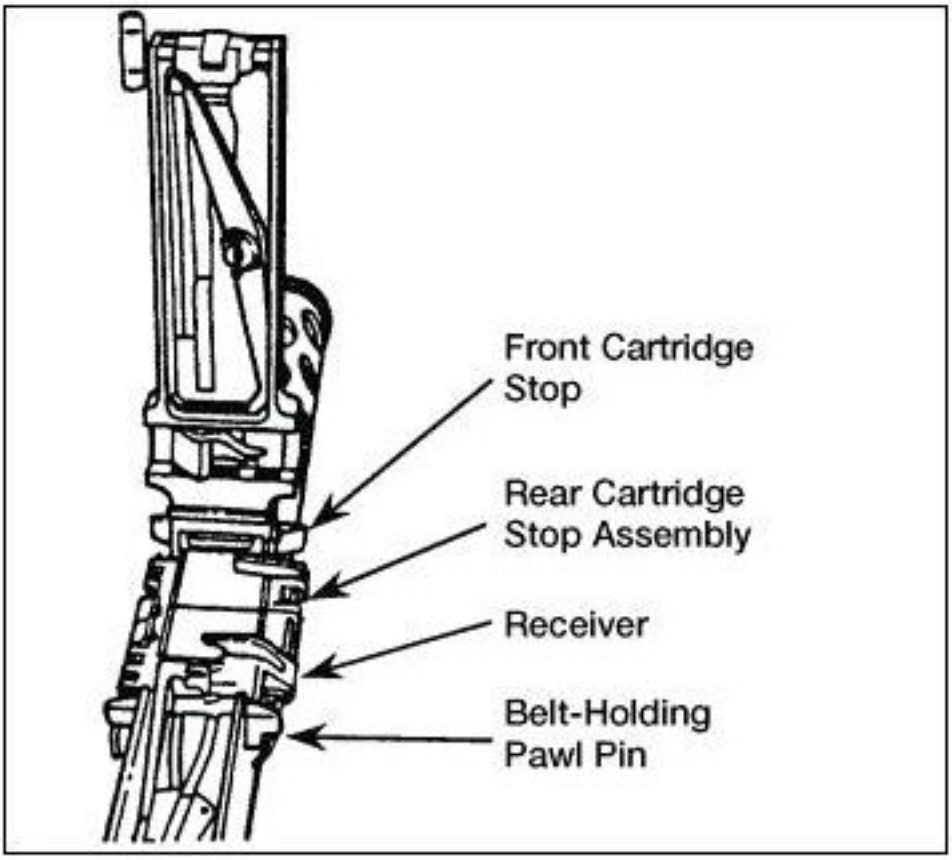

Figure 551-8ST-1025_20 (Removal of the cartridge stop assemblies)

(2) Press down on belt holding pawl assembly to prevent loss of springs, and remove the belt holding pawl pin. Remove belt holding pawl assembly and springs (Figure 551-8ST-1025_21).

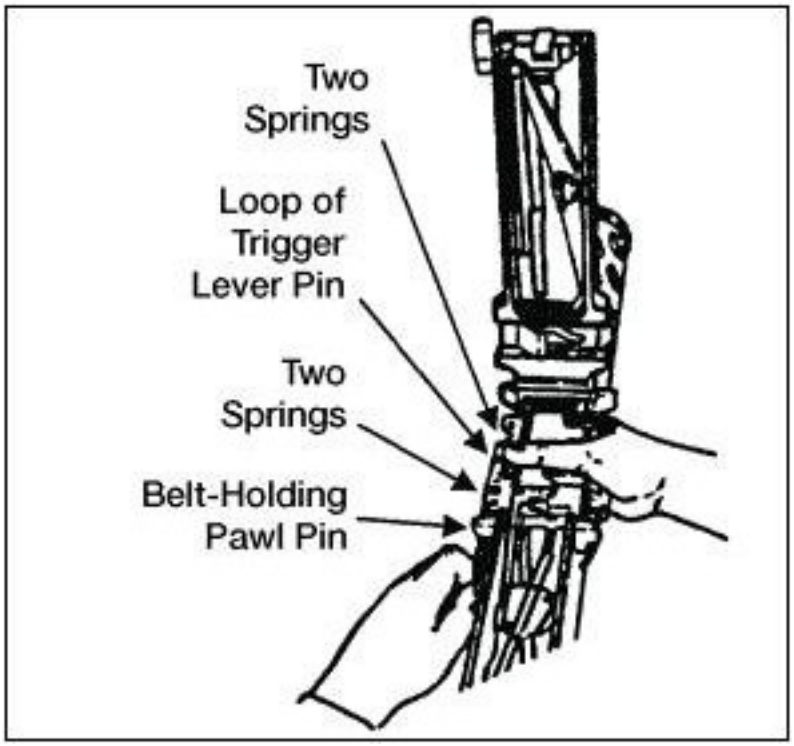

Figure 551-8ST-1025_21 (Removal of the belt holding pawl pin, assembly, and springs)

(3) Raise the loop of the trigger lever pin and rotate it into a vertical position. Reach inside the receiver, grasp the trigger lever, and remove the trigger pin assembly and trigger lever (Figure 551-8ST-1025_22).

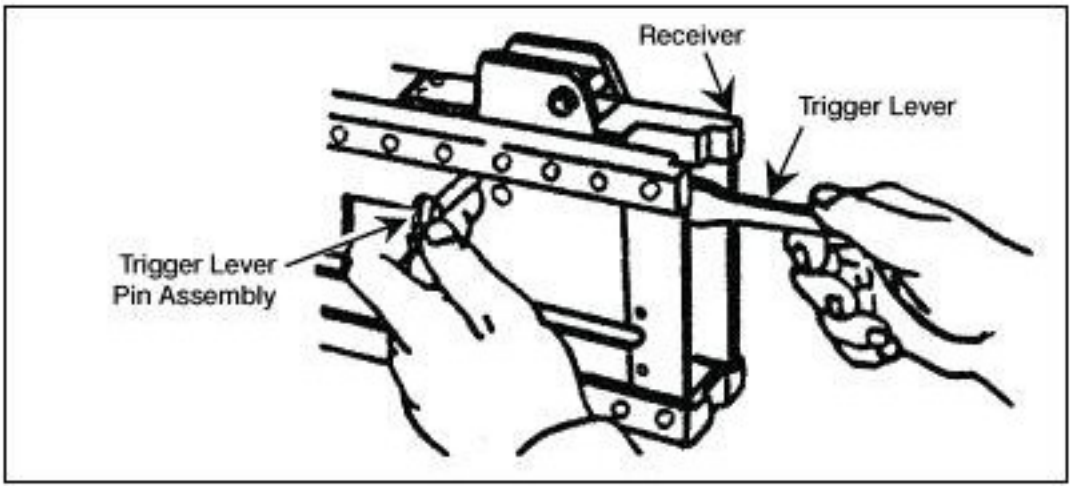

Figure 551-8ST-1025_22 (Removal of the trigger lever pin assembly and trigger lever)

3. Clean the .50 caliber machine gun and components.

a. Clean the barrel assembly.

(1) Clean the bore.

(a) Screw the bore brush into the cleaning rod.

(b) Dip the bore brush in RBC and push the cleaning rod through the chamber end of the barrel.

(c) Unscrew the bore brush from the cleaning rod.

(d) Repeat the process until clean.

(2) Clean the chamber.

(a) Screw the chamber brush into the cleaning rod.

(b) Dip the chamber brush in RBC.

(c) Clean the chamber using a clockwise twisting motion.

(3) Insert a cleaning swab in the cleaning rod and swab out the bore from the chamber end and back. Repeat until the swab comes out clean.

(4) Wipe outside surfaces of the barrel with a carbon removing compound.

(5) Remove all traces of RBC before lubricating.
Note: Do NOT submerge the backplate assembly in any fluid.

b. Clean the backplate assembly using only clean wiping rags to remove foreign matter from the backplate.

c. Clean the bolt assembly.

(1) Clean all parts of the bolt assembly with a cleaning swab saturated with carbon removing compound.

(2) Clean the face of the bolt with a cleaning swab soaked in RBC.

d. Clean the barrel buffer assembly, barrel extension assembly, and receiver assembly.

(1) Use a cleaning swab saturated with carbon removing compound.

(2) Wipe all parts dry with clean wiping rags.

e. Clean the components.

(1) Clean the T&E mechanism.

(a) Remove foreign matter with a clean dry wiping rag.

(b) Use a small arms cleaning brush to clean numbers on the scale.

(2) Clean the M3 tripod, MK64 gun cradle mount, and pintle.

(a) Use a cleaning swab saturated with carbon removing compound.

(b) Wipe all parts dry with clean wiping rags.

f. Clean the ammunition by removing foreign matter with a clean dry wiping rag.

4. Inspect the .50 caliber machine gun for serviceability.

a. Inspect the barrel assembly.

(1) Check the barrel locking notches for wear.

(2) Check the bore for bulges, missing bands, and large pits.

b. Inspect the backplate assembly.

(1) Check guides fir burrs and bends.

(2) Check the backplate latch and backplate lock for proper functioning.

(3) Make sure locking pins are in place.

(4) Check the trigger and bolt latch release for proper functioning.

(5) Make sure handle grips do not move freely and are not cracked.

c. Inspect the driving rod assembly.

(1) Check for flat spots on springs.

(2) Make sure springs operate freely and the rod and pin are not bent.

d. Inspect the bolt assembly.

(1) Check movement of the cartridge extractor in the bolt - it should raise and lower without binding. Check movement of the cartridge ejector.

(2) Check the bolt switch, cocking lever pin, cocking lever, accelerator stop lock, accelerator stop, and sear slide for cracks, bends, and burrs.

(3) Inspect the sear for cracks and burrs.

(a) Inspect the sear notch for wear, ships, and burrs.

(b) Inspect the sear spring for breaks and lack of tension.

(4) Inspect the firing pin for cracks and a chipped or sharp tip. (The tip should be smooth and rounded.)

(5) Check the firing pin extension for cracks, burrs, and free movement in the bolt.

(6) Make sure the bolt is free of burrs and cracks and that the firing pin hole is not visually out of round.

e. Inspect the barrel buffer assembly.

(1) Inspect the buffer body lock for tension, staking, and retention in barrel buffer body.

(2) Inspect the buffer accelerator for broken claws or chipped tips.

(3) Inspect the accelerator pin assembly for broken or missing spring.

(4) Inspect the buffer spring for cracks or breaks.

(5) Inspect the breech lock depressors - they must have slight vertical (up and down) movement but should have no lateral (side to side) movement.

f. Inspect the barrel extension assembly.

(1) Make sure the barrel extension assembly is not bent and the bolt guideways are smooth and free of burrs.

(2) Inspect the threads of the barrel extension assembly for damage.

(3) Make sure the barrel locking spring is staked and fully seated in its groove, making sure that the locking end of the spring has good tension and the lug is not damaged.

(4) Check the breechblock for smooth movement in guideways of the barrel extension assembly.

g. Inspect the receiver and cover assembly.

(1) Inspect the belt holding pawl brackets for looseness, bends, and cracks.

(2) Inspect the side plates for bends that would affect movement of any internal parts.

(3) Check for cracks and burrs at backplate grooves.

(4) Check the operation of rear sight, making sure windage and elevation screws function properly, leaf assembly has good spring tension, and sight assembly is secured tightly to receiver.

(5) Make sure the bolt stop is present and in good condition.

(6) Make sure the trigger lever moves freely.

(7) Make sure the trigger lever pin locks in place.

(8) Make sure the cotter pin is in place on extractor switch.

(9) Check the retracting slide assembly.

(a) Check for visible damage.

(b) Check the retracting slide handles for smooth movement.

(c) Make sure cotter pins are present and in good condition, and the safety wire is in place and properly laced.

h. Inspect the components.

(1) Inspect the T&E mechanism.

(a) Inspect the hand wheels and threads for burrs and rust, making sure it operates smoothly.

(b) Make sure the traversing slide lock lever has spring action and that the elevating mechanism sleeve fits on the traversing bar and clamps firmly.

(c) Check the traversing and elevating scales for legibility.

(d) Inspect the quick release pin and chain for burrs and rust. Check the quick release pin for presence of spring loaded balls.

(2) Inspect the M3 tripod.

(a) Check for completeness of the tripod, making sure that all nuts and bolts are tightly secured.

(b) Check for visible cracks on the legs and tripod head.

(c) Check for missing, broken, or inoperative sleeve lock latch.

(d) Check the pintle lock assembly. Check the surfaces of the pintle, bolt, and nut for burrs and rust. Make sure the cotter pin is present and in good condition.

(e) Check the locking action of the front leg clamping assembly.

(f) Check that the rear legs lock in the open position. Make sure that the sleeve latch notch and right leg slide notch engage completely. Make sure latch spring has good tension.

(g) Check telescoping, indexing, and locking action of rear legs and front leg clamping assembly.

(3) Inspect the MK64 gun cradle mount.

(a) Check for missing or damaged parts.

(b) Check for rust, cracks, or burrs.

(c) Check the pintle lock assembly. Check surfaces of pintle, bolt, and nut for burrs and rust. Make sure cotter pin is present and in good condition.

i. Inspect the ammunition for damaged or corroded rounds.

5. Lubricate the .50 caliber machine gun.

CAUTION

Do NOT mix lubricants on the same weapon. The weapon must be thoroughly cleaned with dry cleaning solvent during change from one lubricant to another.

a. Remove all traces of RBC or carbon removing compound.

b. Lubricate the exterior of the backplate with a light coat of oil. (Do NOT lubricate the interior of the backplate.)

c. Lubricate all other parts with a light coat of LSA or CLP (at temperatures above 0 degrees Fahrenheit) or LAW (at temperatures below 0 degrees Fahrenheit).

6. Assemble the .50 caliber machine gun.

a. Assemble the trigger lever (Figure 551-8ST-1025_23).

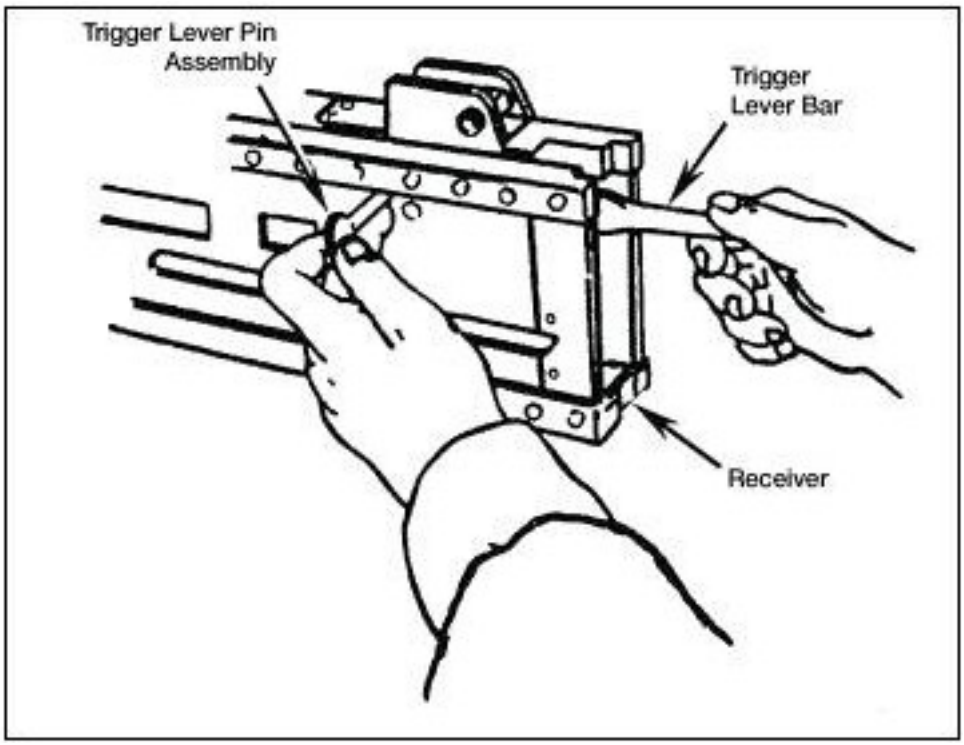

Figure 551-8ST-1025_23 (Assembly of the trigger lever)

(1) Place the trigger lever bar in the receiver directly under the timing nut so the hole in the trigger lever bar is aligned with the mounting hole in the receiver.

(2) Insert the trigger lever pin assembly (loop end vertical) in the assembly hole on left side of receiver.

(3) Match the key on the trigger lever pin with the keyway in the side plate of the receiver and install the pin completely.

(4) Rotate the trigger pin lever assembly 90 degrees and lock in place.

(5) Fold the loop end down.

b. Assemble the receiver group.

(1) Determine the direction of feed. (Figure 551-8ST-1025_24 shows left-hand feed.)

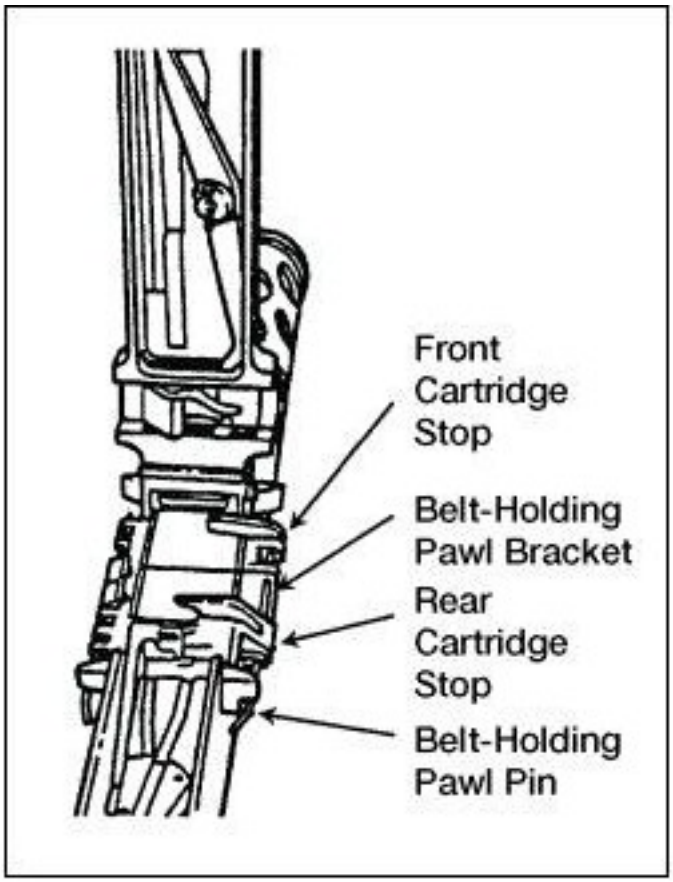

Figure 551-8ST-1025_24 (Installation of the rear cartridge stop assembly and front cartridge stop)

(2) Place the right-hand rear cartridge stop assembly and front cartridge stop on the belt holding pawl bracket.

(3) Install the belt holding pawl with hooked end to rear.

(4) Seat belt holding pawl in place on the belt holding pawl bracket.

(5) Place belt holding pawl assembly on the springs.

(6) Compress springs and insert the belt holding pawl pin (Figure 551-8ST-1025_25).

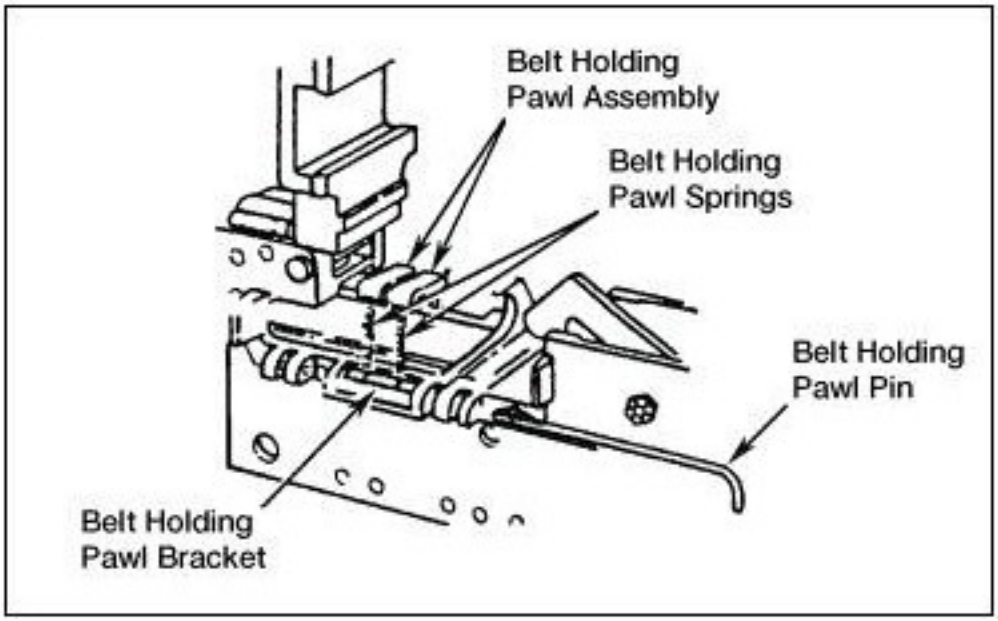

Figure 551-8ST-1025_25 (Installation of the belt holding pawl assembly)

c. Assemble the barrel extension (Figure 551-8ST-1025_26).

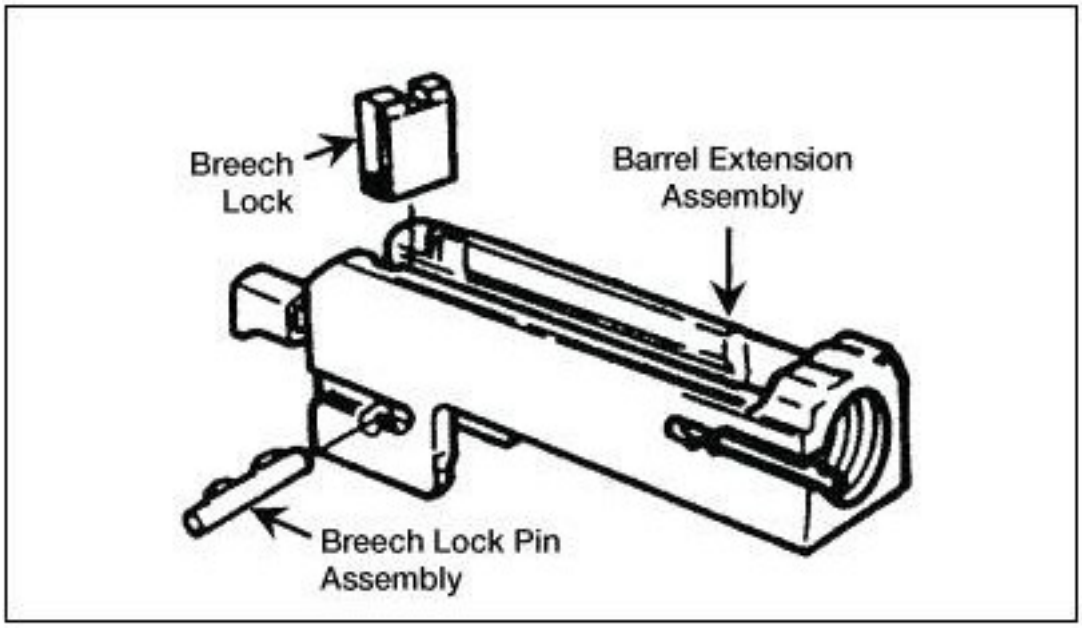

Figure 551-8ST-1025_26 (Assembly of the barrel extension assembly)

(1) Install the breechblock lock with the beveled edge up and to the front of barrel extension assembly.

(2) Install the breech lock pin assembly in barrel extension.

(3) Make sure both ends of the breech lock pin assembly are flush with the sides of barrel extension assembly.

d. Assemble the barrel buffer assembly.

(1) Place buffer accelerator (tips up) into barrel buffer body, align mounting holes, and install buffer pin assembly. Ensure both ends of barrel buffer pin assembly are flush with sides of barrel buffer body (Figure 551-8ST-1025_27).

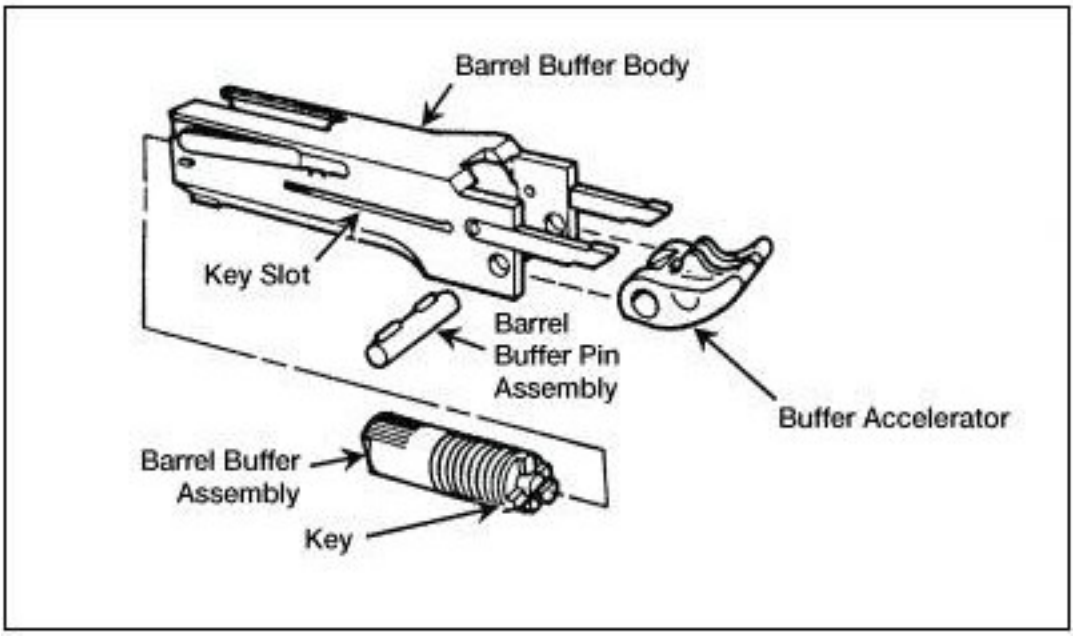

Figure 551-8ST-1025_27 (Assembly of the barrel buffer assembly)

(2) Align key on barrel buffer assembly with key slot in barrel buffer body and slide barrel buffer assembly into barrel buffer body.

(3) Hold the barrel buffer assembly with the buffer accelerator up and engage the notch on the shank of the barrel extension assembly with the cross groove in the piston rod of the barrel assembly (Figure 551-8ST-1025_28).

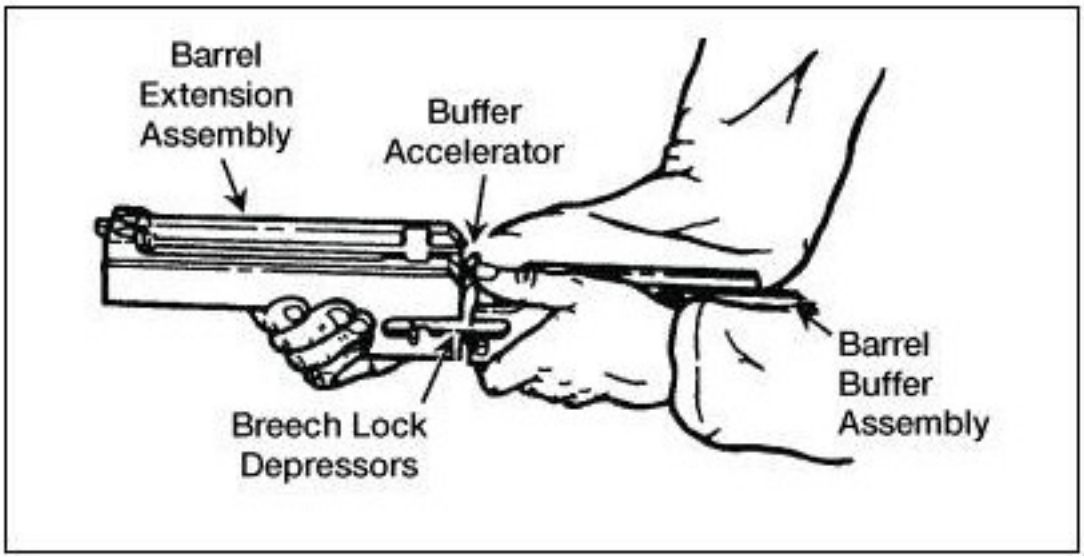

Figure 551-8ST-1025_28 (Attachment of the barrel buffer and barrel extension assemblies)

(4) Align breech lock depressors in grooves of barrel extension assembly and push barrel buffer assembly forward.

(5) Install barrel buffer assembly and barrel extension assembly in receiver (Figure 551-8ST-1025_29).

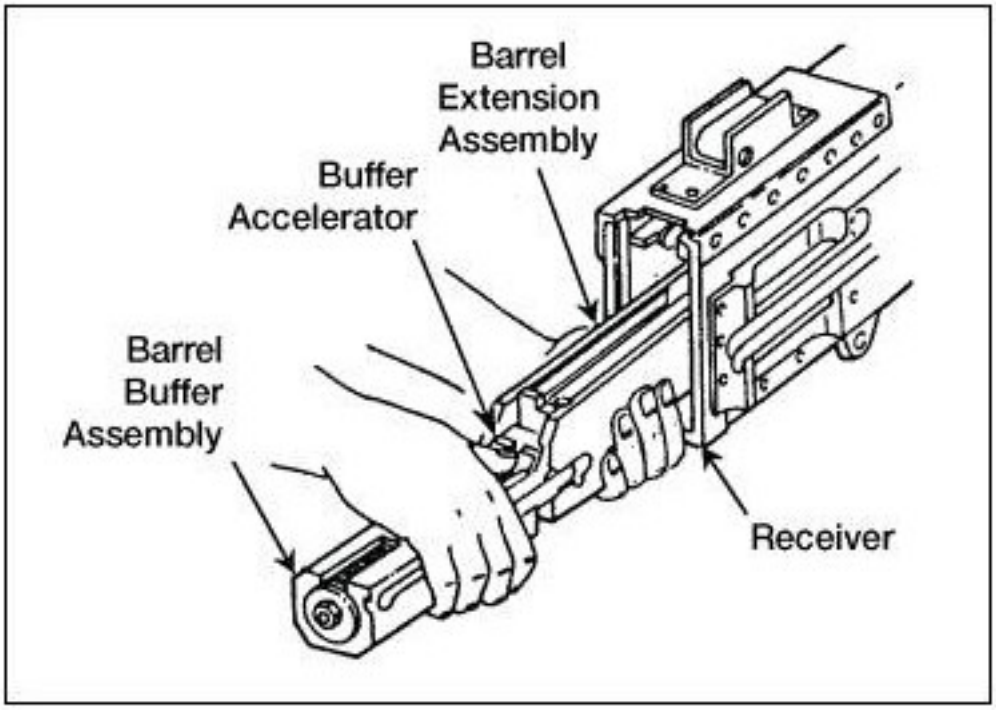

Figure 551-8ST-1025_29 (Installation of the barrel buffer and barrel extension assemblies)

e. Assemble the bolt assembly.

(1) Attach firing pin to firing pin extension assembly (Figure 551-8ST-1025_30).

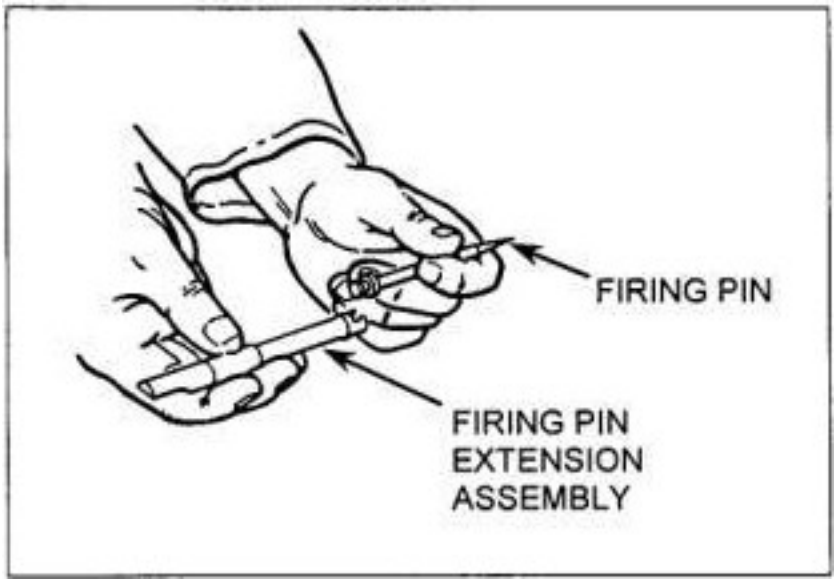

Figure 551-8ST-1025_30 (Attachment of the firing pin to the firing pin extension assembly)

(2) Insert firing pin extension assembly into bolt with notch of firing pin extension assembly down (Figure 551-8ST-1025_31).

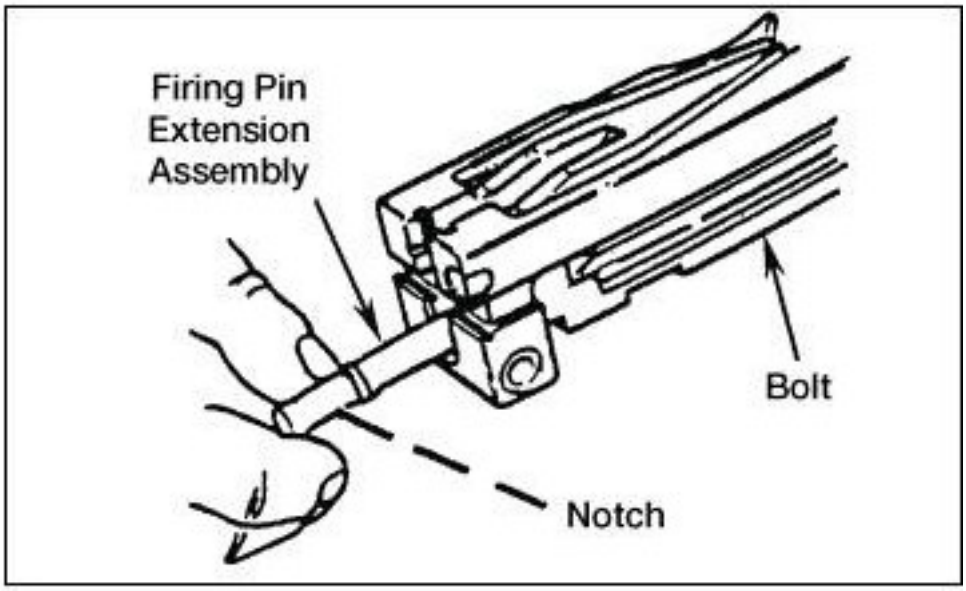

Figure 551-8ST-1025_31 (Installation of the firing pin extension assembly)

(3) Slide firing pin extension assembly forward so tip of firing pin protrudes from face of bolt.

(4) Place sear spring in recess on bolt.

(5) Slide sear down into vertical grooves at the rear of the bolt with wedge-shaped lug pointed outward and upward (Figure 551-8ST-1025_32).

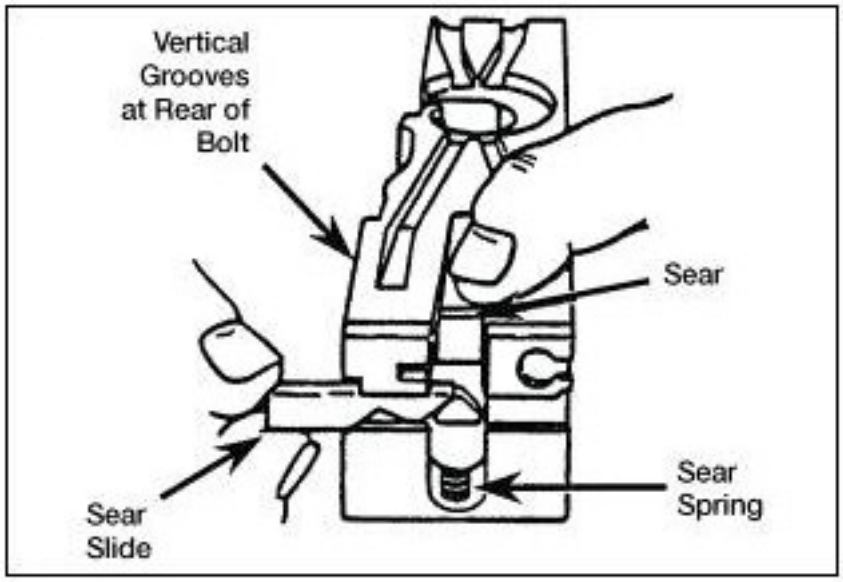

Figure 551-8ST-1025_32 (Installation of the sear side)

(6) Compress the sear spring by pressing down on the sear. Install sear slide from left side of bolt in grooves of bolt with "V" notch down.

Note: Make sure the pin end of the accelerator is installed behind the firing pin spring, not through a coil.

(7) Insert the pin end of accelerator stop through bottom of bolt (Figure 551-8ST-1025_33).

Note: The base end of the accelerator stop should be installed with the long end forward so the beveled edges match.

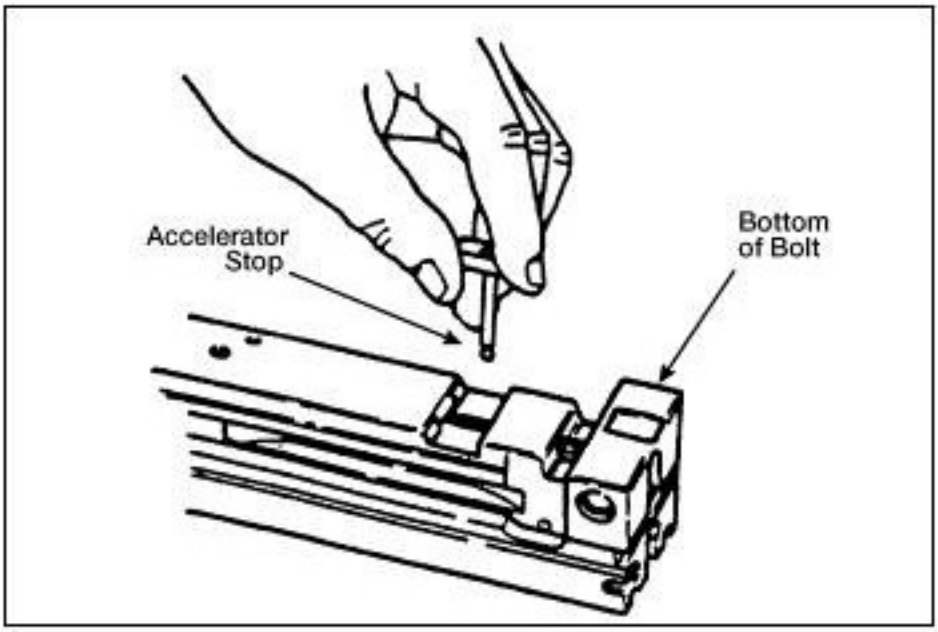

Figure 551-8ST-1025_33 (Attachment of the accelerator stop)

(8) Turn the bolt over and place the forked end of the accelerator stop lock on the notched end of the accelerator stop.

(9) Using the wedge-shaped end of the cocking lever, press down on the flat end of the accelerator stop lock, and move the cocking lever into the groove on the left side of the bolt (Figure 551-8ST-1025_34).

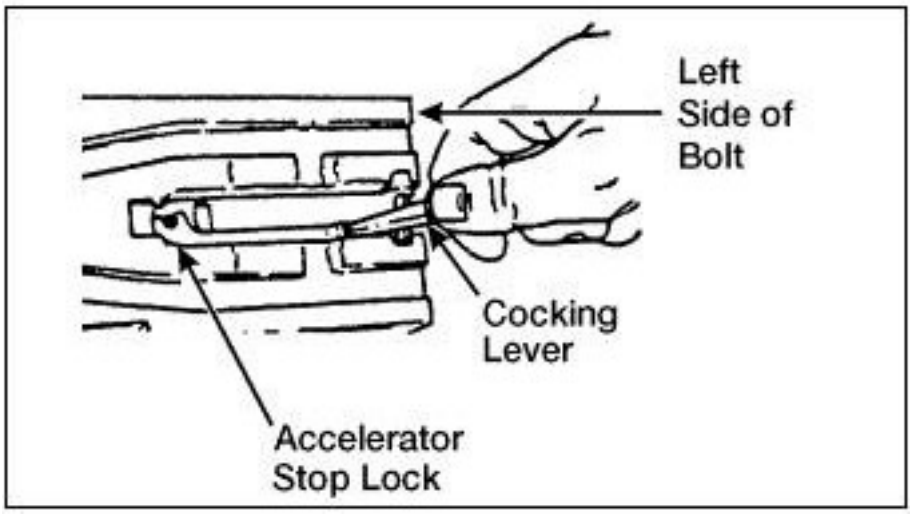

Figure 551-8ST-1025_34 (Attachment of the accelerator stop lock)

(10) Insert the cocking lever, with rounded nose on lower end of lever to rear, into slot in top of bolt (Figure 551-8ST-1025_35).

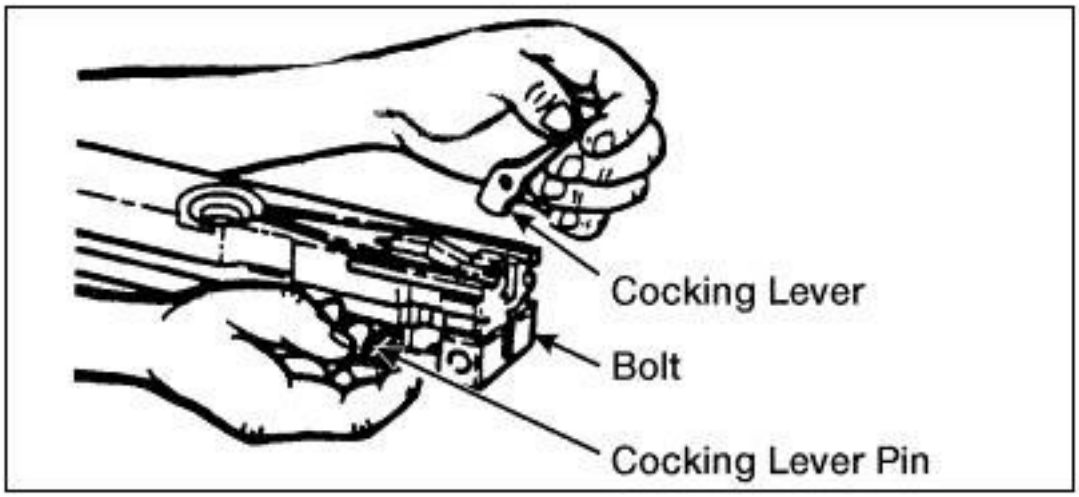

Figure 551-8ST-1025_35 (Attachment of the cocking lever)

(11) Align the hole in the cocking lever with the holes in the bolt and insert the cocking lever pin from the left side.

WARNING

Do NOT try to release the firing pin with the cocking lever forward. The cocking lever could spring back forcibly and cause serious injury.

(12) Push the cocking lever forward to charge the firing pin and return the cocking lever to the rearward position.

(13) Test the firing pin release.

(a) Trip the firing pin by depressing the top of the sear with a section of a swab-holder.

(b) If doing so makes a sharp metallic sound, the firing pin spring is in good condition (Figure 551-8ST-1025_36).

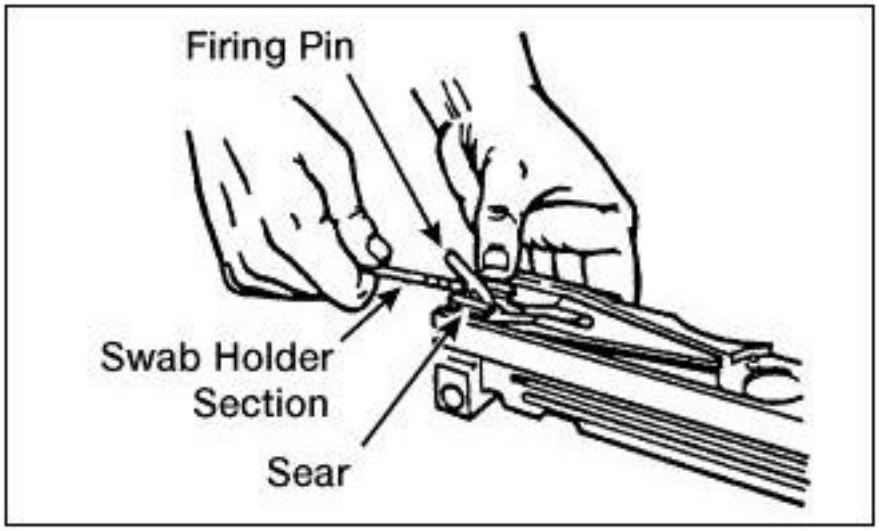

Figure 551-8ST-1025_36 (Testing the firing pin release)

(14) Place the cocking lever in the forward position to determine the direction of feed before installing the bolt switch.

(15) Place bolt switch in position so the feed groove is continuous for the feed direction indicated (Figure 551-8ST-1025_37).

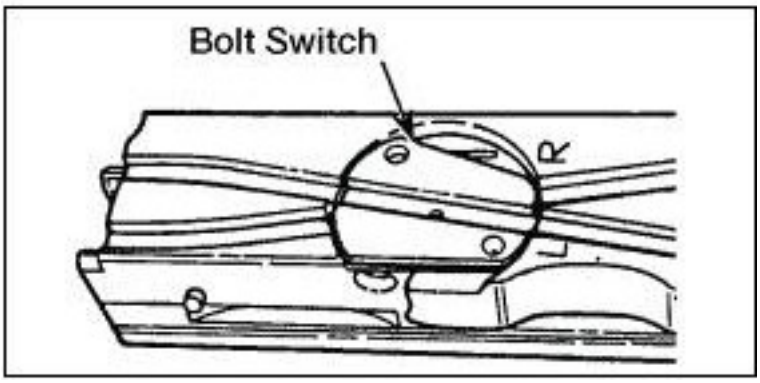

Figure 551-8ST-1025_37 (Installation of the bolt assembly)

(16) Hold the cartridge extractor in vertical position and insert the shank end of the cartridge extractor into the left side of bolt. (Make sure the cartridge extractor fits into the bolt as far as possible.)

(17) Rotate the cartridge extractor downward to a full horizontal position. Check that the flange on the bottom of the cartridge extractor has an engaged shoulder on bolt.

(18) Ensure the cocking lever is forward.

(19) Push the bolt assembly forward into the receiver until the bolt latch engages notches in the top of the bolt assembly (Figure 551-8ST-1025_38).

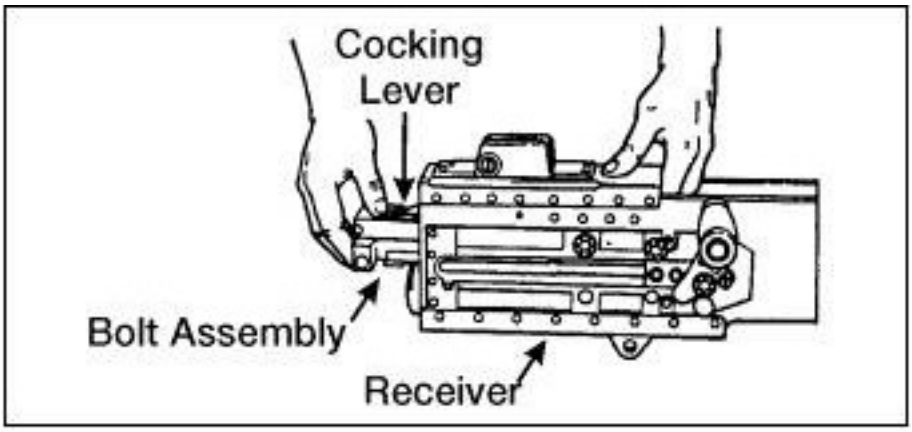

Figure 551-8ST-1025_38 (Installation of the bolt assembly)

(20) If you cannot install the bolt this way, remove the barrel extension and buffer assembly from the receiver. Install the bolt assembly into the barrel extension and buffer assembly, and then install them in the receiver (Figure 551-8ST-1025_39).

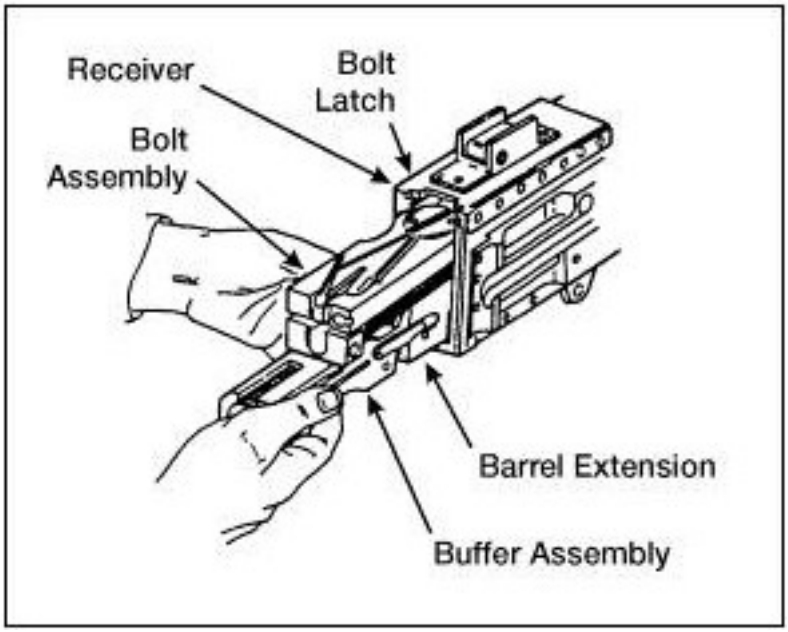

Figure 551-8ST-1025_39 (Installation of the bolt assembly within the barrel extension and buffer assembly)

(21) Raise bolt latch and push bolt assembly into the receiver.

(22) Align holes in bolt assembly with stud assembly hole in receiver and install bolt stud in hole in bolt assembly. Place bolt in forward position (Figure 551-8ST-1025_40).

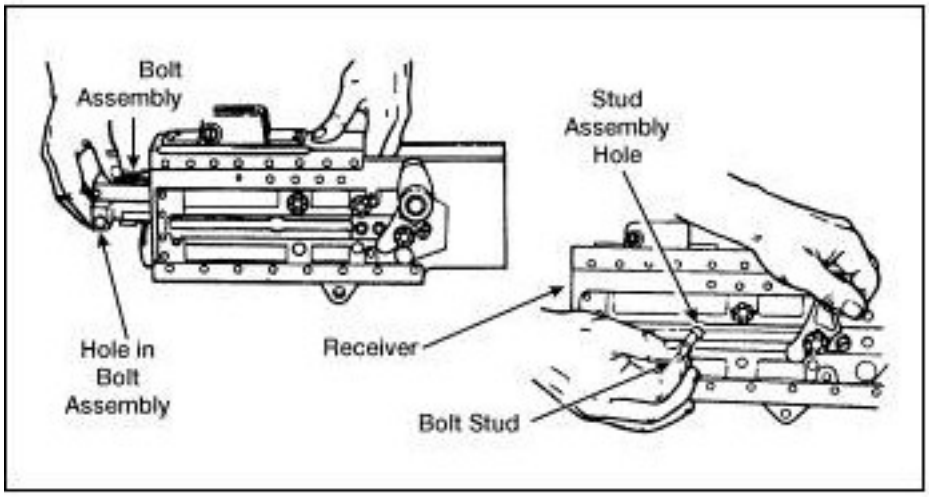

Figure 551-8ST-1025_40 (Installation of the bolt assembly)

f. Assemble the driving spring rod assembly (Figure 551-8ST-1025_41).

(1) Install the driving spring rod assembly in the upper right corner of the bolt.

(2) Push forward and to the right until the driving spring rod assembly engages in the hole in the side plate of the receiver-not in the groove for the backplate.

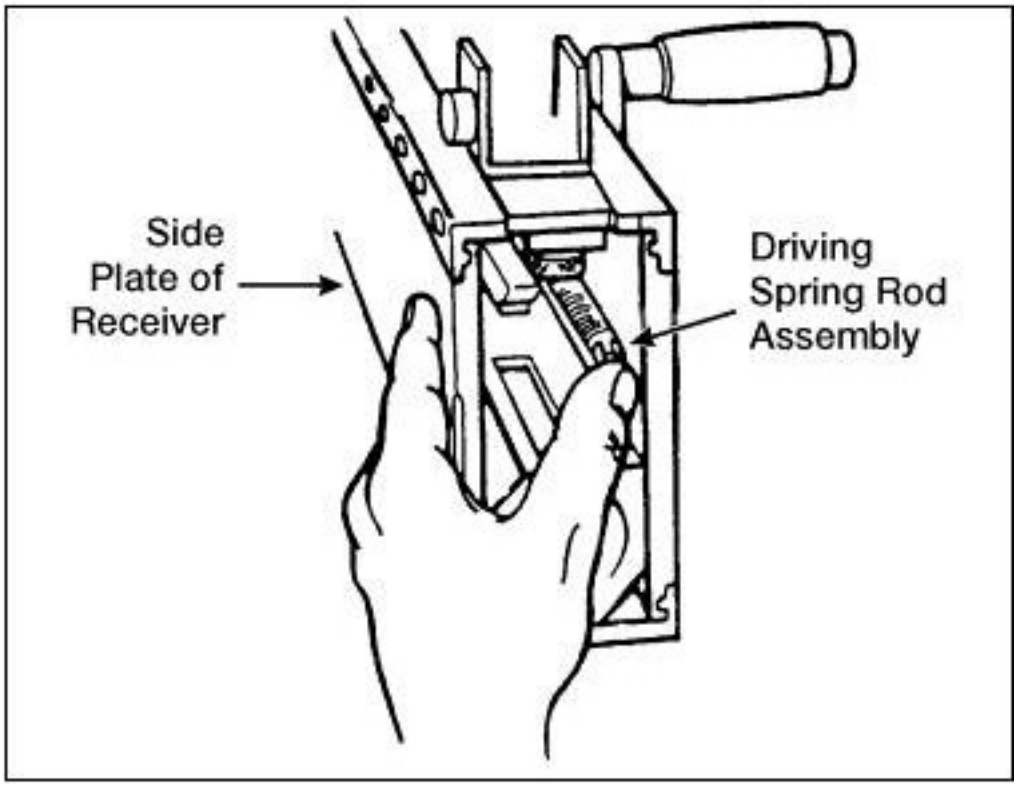

Figure 551-8ST-1025_41 (Installation of the driving spring rod assembly)

g. Install the backplate assembly (Figure 551-8ST-1025_42).

(1) Align the backplate assembly with receiver grooves.

(2) Pull the backplate latch lock while lifting up on the backplate latch.

(3) Lower the backplate assembly down until engaged in receiver.

(4) Test proper locking by pulling up on the backplate assembly.

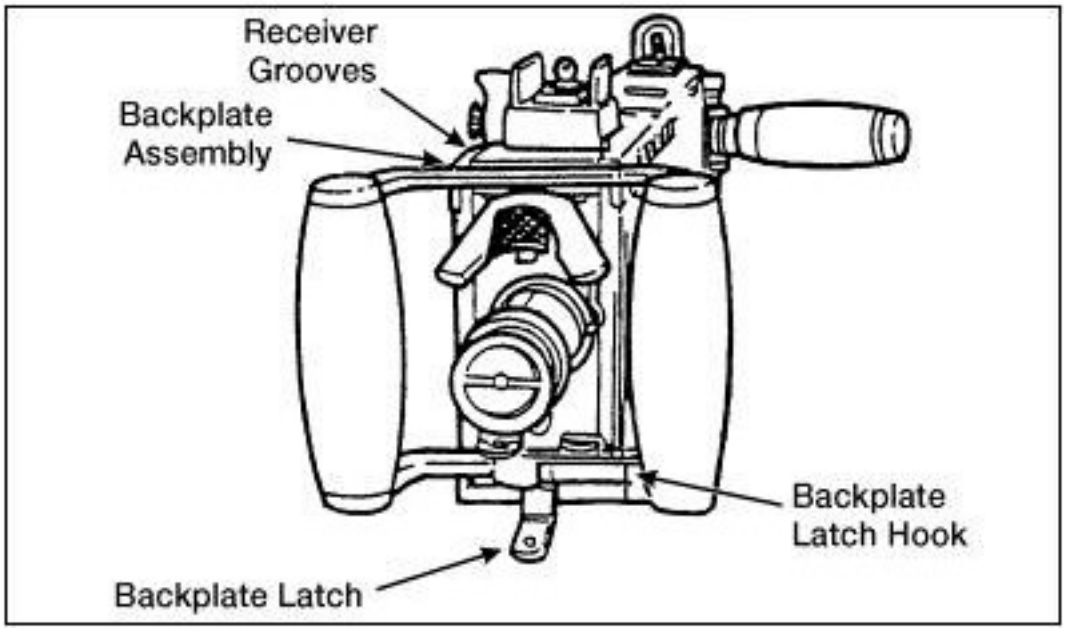

Figure 551-8ST-1025_42 (Installation of the backplate assembly)

h. Assemble the barrel assembly.

(1) Retract the bolt far enough for barrel locking spring lug to center in barrel locking spring hole on right side of receiver.

(2) Place the smallest loop of a caliber .50 link between the trunnion block and the barrel extension. (This holds the barrel locking spring lug aligned with the 3/8-inch hole.)

(3) Install and screw barrel assembly completely into the receiver.

(4) Unscrew the barrel assembly two clicks and check headspace.

7. Perform a function check to make sure the weapon is assembled correctly.

a. Place the weapon in the single-shot mode.

b. Open the cover and pull the retracting slide handle to the rear. (The bolt should lock to rear in single-shot mode.)

c. Hold the retracting slide handle to the rear; depress the bolt latch release and ease the bolt forward.

d. Press trigger; weapon should fire.

e. Place the weapon in the automatic-fire mode.

(Asterisks indicates a leader performance step.)

Evaluation Guidance: bsp;Score the soldier a GO if all performance measures are correctly completed/pass (P). Score the Soldier a NO-GO if any of the performance measures are missed or incorrectly performed/fail (F).

Evaluation Preparation: SETUP: Provide the Soldier with the equipment and/or materials described in the conditions statement.
BRIEF THE SOLDIER: Tell the Soldier what is expected of him by reviewing the task standards. Stress to the Soldier the importance of observing all cautions, warnings, and dangers to avoid injury to personnel and, if applicable, damage to equipment.

PERFORMANCE MEASURES	GO	NO-GO	N/A
1. Clear the caliber .50 machine gun?			
2. Disassemble the machine gun?			
3. Clean the .50 caliber machine gun and components?			
4. Inspect the .50 caliber machine gun for serviceability?			
5. Lubricate the .50 caliber machine gun?			
6. Assemble the .50 caliber machine gun?			
7. Perform a function check to make sure the weapon is assembled correctly?			

Supporting Reference(s):

Step Number	Reference ID	Reference Name	Required	Primary
	FM 3-22.65	Browning Machine Gun, Caliber .50 HB, M2	Yes	No
	TM 9-1005-213-10	Operator's Manual for Machine Guns, Caliber .50; M2, Heavy Barrel Flexible, W/E, M48 Turret Type, Soft Mount, (Navy) Fixed Type Right Hand Feed, (Navy) Fixed Type Left Hand Feed (Navy) {TM 02498A-10/2; To 11W2-6-3-161; SW361-AB-MMO-010}	Yes	No

Environment: Environmental protection is not just the law but the right thing to do. It is a continual process and starts with deliberate planning. Always be alert to ways to protect our environment during training and missions. In doing so, you will contribute to the sustainment of our training resources while protecting people and the environment from harmful effects. Refer to FM 3-34.5 Environmental Considerations and GTA 05-08-002 ENVIRONMENTAL-RELATED RISK ASSESSMENT. Environmental protection is not just the law but the right thing to do. It is a continual process and starts with deliberate planning. Always be alert to ways to protect our environment during training and missions. In doing so, you will contribute to the sustainment of our training resources while protecting people and the environment from harmful effects. Refer to FM 3-34.5 Environmental Considerations and GTA 05-08-002 ENVIRONMENTAL-RELATED RISK ASSESSMENT.

Safety: In a training environment, leaders must perform a risk assessment in accordance with ATP 5-19, Risk Management. Leaders will complete the current Deliberate Risk Assessment Worksheet in accordance with the TRADOC Safety Officer during the planning and completion of each task and sub-task by assessing mission, enemy, terrain and weather, troops and support available-time available and civil considerations, (METT-TC). Note: During MOPP training, leaders must ensure personnel are monitored for potential heat injury. Local policies and procedures must be followed during times of increased heat category in order to avoid heat related injury. Consider the MOPP work/rest cycles and water replacement guidelines IAW FM 3-11.4, Multiservice Tactics, Techniques, and Procedures for Nuclear, Biological, and Chemical (NBC) Protection, FM 3-11.5, Multiservice Tactics, Techniques, and Procedures for Chemical, Biological, Radiological, and Nuclear Decontamination. In a training environment, leaders must perform a risk assessment in accordance with FM 5-19, Composite Risk Management. Leaders will complete a DA Form 7566 COMPOSITE RISK MANAGEMENT WORKSHEET during the planning and completion of each task and sub-task by assessing mission, enemy, terrain and weather, troops and support available-time available and civil considerations, (METT-TC). Note: During MOPP training, leaders must ensure personnel are monitored for potential heat injury. Local policies and procedures must be followed during times of increased heat category in order to avoid heat related injury. Consider the MOPP work/rest cycles and water replacement guidelines IAW FM 3-11.4, NBC Protection, FM 3-11.5, CBRN Decontamination.

Prerequisite Individual Tasks : None

Supporting Individual Tasks :

Task Number	Title	Proponent	Status
071-022-0010	Mount a Caliber .50 M2 Machine Gun on an M3 Tripod	071 - Infantry (Individual)	Approved
071-022-0004	Unload a Caliber .50 M2 Machine Gun	071 - Infantry (Individual)	Approved
071-022-0003	Load a Caliber .50 M2 Machine Gun	071 - Infantry (Individual)	Approved
071-022-0011	Dismount a Caliber .50 M2 Machine Gun from an M3 Tripod	071 - Infantry (Individual)	Approved
071-022-0005	Correct Malfunctions of a Caliber .50 M2 Machine Gun	071 - Infantry (Individual)	Approved

Supported Individual Tasks :

Task Number	Title	Proponent	Status
551-8ST-4022	Direct Operation of a .50 Caliber Machine Gun Onboard a Vessel	551 - Transportation (Individual)	Approved

Supported Collective Tasks :

Task Number	Title	Proponent	Status
55-2-1508	Conduct Vessel Operations	55 - Transportation (Collective)	Approved
55-2-0498	Defend Vessel Convoy	55 - Transportation (Collective)	Approved

55-2-1506	React to Shipboard Emergency Aboard an Army vessel	55 - Transportation (Collective)	Approved
55-2-0037	Conduct Vessel Defense While in Port.	55 - Transportation (Collective)	Approved

ICTL Data :

ICTL Title	Personnel Type	MOS Data
MOS 88K Watercraft Operator SL3	Enlisted	MOS: 88K, Skill Level: SL3, Duty Pos: TAV
MOS 88K Watercraft Operator SL 4	Enlisted	MOS: 88K, Skill Level: SL4, Duty Pos: TFJ
88L30 Watercraft Engineer	Enlisted	MOS: 88L, Skill Level: SL3, Duty Pos: TFR, LIC: EN
88L40 Watercraft Engineer	Enlisted	MOS: 88L, Skill Level: SL4, Duty Pos: TGB, LIC: EN, SQI: O